ALUMINUM ELECTROLYTIC CAPACITORS

nichicon

NR series

Screw Terminal Type, 85°C Standard

HR High Ripple Current

- Load life of 5000 hours application of rated ripple current at 85°C.
- Extended rarge up to ϕ100 × 250L size.
- Compliant to the RoHS directive (2002/95/EC).

NT High Temperature　NY High Voltage

NR

■Specifications

Item	Performance Characteristics
Category Temperature Range	– 40 to +85°C (10 to 100V) , – 25 to +85°C (160 to 250V)
Rated Voltage Range	10 to 250V
Rated Capacitance Range	1000 to 2200000μF
Capacitance Tolerance	±20% at 120Hz, 20°C
Leakage Current	After 5 minutes' application of rated voltage, leakage current is not more than $3\sqrt{CV}$ (μA) or 5 mA, whichever is smaller (at 20°C) . [C:Rated Capacitance (μF) , V:Voltage(V)]

Tangent of loss angle (tan δ) (MAX)

ϕD	L \ V	10	16	25	35	50	63	80	100	160 to 250
35	80 to 100	0.6	0.4	0.35	0.3	0.25	0.25	0.2	0.12	0.15
	120	0.7	0.55	0.4	0.3	0.25	0.25	0.2	0.15	0.15
51	70 to 100	0.9	0.6	0.45	0.35	0.25	0.25	0.2	0.15	0.15
	120 to 140	1.0	0.8	0.5	0.4	0.3	0.25	0.2	0.15	0.15
63.5	100	0.9	—	—	0.5	0.35	0.3	0.25	—	0.2
	120 to 140	1.2	0.75	0.65	—	—	0.3	0.3	0.2	0.2
76.2	100	1.6	—	—	0.65	—	—	—	—	0.2
	120 to 140	1.6	1.1	0.75	0.75	0.55	0.5	0.35	0.3	0.2
90	140 to 220	2.0	1.5	1.0	0.9	0.75	0.6	0.4	0.3	0.25
100	250	2.4	1.5	1.0	0.9	0.75	0.6	0.4	0.3	0.25

Measurement frequency: 120Hz, Temperature : 20°C

Stability at Low Temperature

Measurement frequeny : 120Hz

Rated voltage(V)	10 to 100	160 to 250
Impedance ratio ZT/Z20(MAX.)	Z – 40°C / Z+20°C	Z – 25°C / Z+20°C
	12	8

Endurance

The specifications listed at right shall be met when the capacitors are restored to 20°C after D.C. bias plus rated ripple current is applied for 5000 hours at 85°C, the peak voltage shall not exceed the rated voltage.

Capacitance change	Within ±15% of the initial capacitance value
tan δ	175% or less than the initial specified value
Leakage current	Less than or equal to the initial specified value

Shelf Life

After storing the capacitors under no load at 85°C for 1000 hours and then performing voltage treatment based on JIS C 5101-4 clause 4.1 at 20°C, they shall meet the requirements listed at right.

Capacitance change	Within ±20% of the initial capacitance value
tan δ	175% or less than the initial specified value
Leakage current	Less than or equal to the initial specified value

Marking: Printed with black color letter on light blue sleeve.

■Drawing

ϕ35 Screw terminal type

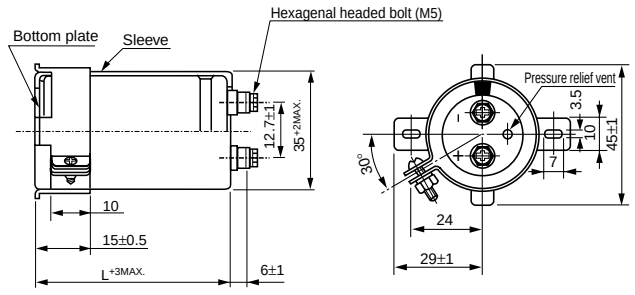

Type numbering system (Example : 250V 2200μF)

1	2	3	4	5	6	7	8	9	10	11	12
L	N	R	2	E	2	2	2	M	S	E	

- 12: Mounting bracket
  - (ϕ 35)

Code less	2-leg brackets
N	No brackets

  - (ϕ 51 to ϕ 90)

Code less	3-leg brackets
B	2-leg brackets
N	No brackets

  - (ϕ 100)

Code less	3-leg brackets
N	No brackets

- 11: Configuration※
- 10: Capacitance tolerance (±20%)
- 9: Rated capacitance (2200μF)
- 8 7 6: Rated voltage (250V)
- 5 4: Series name
- 3 2 1: Type

※Configuration

Cr (III) Plating (RoHS compliant)
SE

Please refer to page 293 for schematic of dimensions.

※Please contact to us if PVCless products are required.

● Dimension table in next page.

NR series

Screw terminal types for ϕ51 and larger

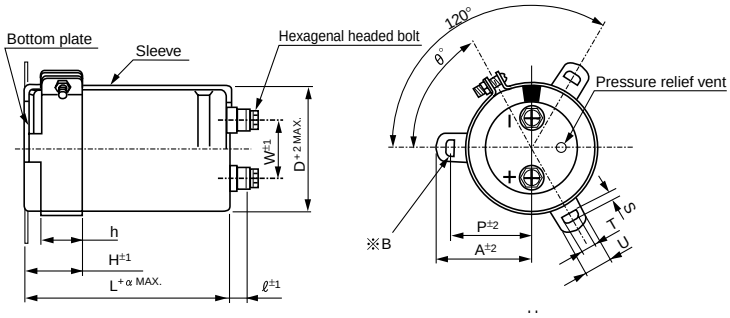

*B
3-leg brackets for ϕ90 capacitors have different hole shapes from the ordinary ones as illustrated below.

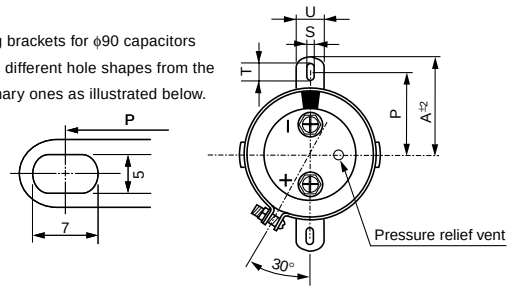

Note:
Capacitors with body dia. ϕ51 or larger are furnished with 3-leg brackets shown above as standard.
If these capacitors are preferred to have 2-leg brackets as shown right, add "B" in the 12th digit of type numbering system.

● Dimension of terminal pitch (W) and length (ℓ) and Nominal dia.of bolt (mm)

ϕD	W	ℓ	α	Nominal dia.of bolt
51	22.0	6	3	M5
63.5	28.6	6	3	M5
76.2	31.8	6	3	M5
90	31.8	6	3	M5
100	41.5	10	4	M8

● Dimensions of mounting bracket (mm)

Leg Shape / Symbol / ϕD	3-Legs					2-Legs			
	51	63.5	76.2	90	100	51	63.5	76.2	90
P	32.5	38.1	44.5	50.8	56.3	33.2	40.5	46.5	53
A	38.5	43	49.2	58.5	62	40	46.5	53	59
T	7.5	8.0	7.0	8.0	8.0	6.0	7.0	6.0	6.0
S	5.0	5.0	5.0	5.0	5.0	4.5	4.5	4.5	4.5
U	12	14	14	18	16	14	14	14	14
θ°	60	60	60	60	60	30	30	30	30
H	20	25	30	35	36	25	35	35	35
h	15	20	24	25	30	15	20	20	20

■Dimensions

10V (1A)					
Cap. (μF)	Size ϕD X L(mm)	Rated ripple (Arms)	tan δ	Leakage Current (mA)	Code
47000	35×80	6.0	0.60	2.05	LNR1A473MSE
68000	35×80	7.2	0.60	2.47	LNR1A683MSE
100000	35×100	8.8	0.60	3.00	LNR1A104MSE
150000	51×80	10.7	0.90	3.67	LNR1A154MSE
220000	51×100	13.0	0.90	4.44	LNR1A224MSE
330000	63.5×100	15.9	0.90	5.00	LNR1A334MSE
470000	63.5×120	19.0	1.20	5.00	LNR1A474MSE
680000	76.2×120	22.8	1.60	5.00	LNR1A684MSE
1000000	90×170	27.7	2.00	5.00	LNR1A105MSE
1500000	90×220	33.9	2.00	5.00	LNR1A155MSE
2200000	100×250	41.1	2.40	5.00	LNR1A225MSE

16V (1C)					
Cap. (μF)	Size ϕD X L(mm)	Rated ripple (Arms)	tan δ	Leakage Current (mA)	Code
47000	35×80	6.4	0.40	2.60	LNR1C473MSE
68000	35×100	7.9	0.40	3.12	LNR1C683MSE
100000	35×120	10.6	0.55	3.79	LNR1C104MSE
150000	51×100	11.5	0.60	4.64	LNR1C154MSE
220000	51×120	15.6	0.80	5.00	LNR1C224MSE
330000	63.5×120	25.1	0.75	5.00	LNR1C334MSE
470000	76.2×120	30.5	1.10	5.00	LNR1C474MSE
680000	90×170	33.0	1.50	5.00	LNR1C684MSE
1000000	90×220	36.0	1.50	5.00	LNR1C105MSE
1500000	100×250	39.7	1.50	5.00	LNR1C155MSE

Rated ripple current (Arms) at 85°C 120Hz

NR series

■Dimensions

25V (1E)					
Cap. (μF)	Size φD × L(mm)	Rated ripple (Arms)	tan δ	Leakage Current (mA)	Code
33000	35×80	6.2	0.35	2.72	LNR1E333MSE
47000	35×100	8.2	0.35	3.25	LNR1E473MSE
68000	35×120	9.4	0.40	3.91	LNR1E683MSE
100000	51×100	12.0	0.45	4.74	LNR1E104MSE
150000	51×120	15.3	0.50	5.00	LNR1E154MSE
220000	63.5×120	18.9	0.65	5.00	LNR1E224MSE
330000	76.2×120	24.8	0.75	5.00	LNR1E334MSE
470000	90×170	30.8	1.00	5.00	LNR1E474MSE
680000	90×220	33.3	1.00	5.00	LNR1E684MSE
1000000	100×250	36.4	1.00	5.00	LNR1E105MSE

35V (1V)					
Cap. (μF)	Size φD × L(mm)	Rated ripple (Arms)	tan δ	Leakage Current (mA)	Code
33000	35×80	6.2	0.30	3.22	LNR1V333MSE
47000	35×120	8.2	0.30	3.84	LNR1V473MSE
68000	51×80	9.3	0.35	4.62	LNR1V683MSE
100000	51×120	13.6	0.40	5.00	LNR1V104MSE
150000	63.5×100	14.5	0.50	5.00	LNR1V154MSE
220000	76.2×100	16.8	0.65	5.00	LNR1V224MSE
330000	76.2×140	24.8	0.75	5.00	LNR1V334MSE
470000	90×170	32.6	0.90	5.00	LNR1V474MSE
680000	90×220	35.2	0.90	5.00	LNR1V684MSE
1000000	100×250	38.5	0.90	5.00	LNR1V105MSE

50V (1H)					
Cap. (μF)	Size φD × L(mm)	Rated ripple (Arms)	tan δ	Leakage Current (mA)	Code
15000	35×80	5.4	0.25	2.59	LNR1H153MSE
22000	35×100	6.1	0.25	3.14	LNR1H223MSE
33000	51×70	7.0	0.25	3.85	LNR1H333MSE
47000	51×90	8.6	0.25	4.59	LNR1H473MSE
68000	51×100	11.0	0.25	5.00	LNR1H683MSE
100000	63.5×100	14.2	0.35	5.00	LNR1H104MSE
150000	76.2×120	18.6	0.55	5.00	LNR1H154MSE
220000	90×140	20.3	0.75	5.00	LNR1H224MSE
330000	90×170	25.3	0.75	5.00	LNR1H334MSE
470000	90×220	33.2	0.75	5.00	LNR1H474MSE
680000	100×250	36.0	0.75	5.00	LNR1H684MSE

63V (1J)					
Cap. (μF)	Size φD × L(mm)	Rated ripple (Arms)	tan δ	Leakage Current (mA)	Code
10000	35×80	4.1	0.25	2.38	LNR1J103MSE
15000	35×100	5.5	0.25	2.91	LNR1J153MSE
22000	35×120	7.1	0.25	3.53	LNR1J223MSE
33000	51×80	8.8	0.25	4.32	LNR1J333MSE
47000	51×120	11.7	0.25	5.00	LNR1J473MSE
68000	63.5×100	15.0	0.30	5.00	LNR1J683MSE
100000	63.5×140	20.8	0.30	5.00	LNR1J104MSE
150000	76.2×140	26.0	0.50	5.00	LNR1J154MSE
220000	90×170	28.3	0.60	5.00	LNR1J224MSE
330000	90×220	31.2	0.60	5.00	LNR1J334MSE
470000	100×250	33.6	0.60	5.00	LNR1J474MSE

80V (1K)					
Cap. (μF)	Size φD × L(mm)	Rated ripple (Arms)	tan δ	Leakage Current (mA)	Code
10000	35×80	4.2	0.20	2.68	LNR1K103MSE
15000	35×120	6.0	0.20	3.28	LNR1K153MSE
22000	51×80	6.5	0.20	3.97	LNR1K223MSE
33000	51×120	9.2	0.20	4.87	LNR1K333MSE
47000	63.5×100	12.7	0.25	5.00	LNR1K473MSE
68000	63.5×140	15.5	0.30	5.00	LNR1K683MSE
100000	76.2×140	21.3	0.35	5.00	LNR1K104MSE
150000	90×170	26.5	0.40	5.00	LNR1K154MSE
220000	90×220	28.9	0.40	5.00	LNR1K224MSE
330000	100×250	31.8	0.40	5.00	LNR1K334MSE

100V (2A)					
Cap. (μF)	Size φD × L(mm)	Rated ripple (Arms)	tan δ	Leakage Current (mA)	Code
4700	35×80	3.8	0.12	2.05	LNR2A472MSE
6800	35×100	4.5	0.12	2.47	LNR2A682MSE
10000	35×120	5.3	0.15	3.00	LNR2A103MSE
15000	51×80	6.0	0.15	3.67	LNR2A153MSE
22000	51×100	6.8	0.15	4.45	LNR2A223MSE
33000	51×140	10.0	0.15	5.00	LNR2A333MSE
47000	63.5×140	14.4	0.20	5.00	LNR2A473MSE
68000	76.2×140	18.2	0.30	5.00	LNR2A683MSE
100000	90×170	22.1	0.30	5.00	LNR2A104MSE
150000	90×220	27.0	0.30	5.00	LNR2A154MSE
220000	100×250	32.7	0.30	5.00	LNR2A224MSE

Rated ripple current (Arms) at 85°C, 120Hz

NR series

■Dimensions

160V (2C)					
Cap. (μF)	Size φD × L(mm)	Rated ripple (Arms)	tan δ	Leakage Current (mA)	Code
2200	35×80	3.2	0.15	1.77	LNR2C222MSE
3300	35×120	4.7	0.15	2.17	LNR2C332MSE
4700	51×80	5.0	0.15	2.60	LNR2C472MSE
6800	51×100	6.4	0.15	3.12	LNR2C682MSE
10000	63.5×100	9.1	0.20	3.79	LNR2C103MSE
15000	76.2×100	12.0	0.20	4.64	LNR2C153MSE
22000	76.2×140	16.9	0.20	5.00	LNR2C223MSE
33000	90×140	19.2	0.25	5.00	LNR2C333MSE
47000	90×170	20.6	0.25	5.00	LNR2C473MSE
68000	90×220	22.3	0.25	5.00	LNR2C683MSE
100000	100×250	24.4	0.25	5.00	LNR2C104MSE

200V (2D)					
Cap. (μF)	Size φD × L(mm)	Rated ripple (Arms)	tan δ	Leakage Current (mA)	Code
1500	35×80	2.9	0.15	1.64	LNR2D152MSE
2200	35×100	3.5	0.15	1.99	LNR2D222MSE
3300	51×80	4.8	0.15	2.43	LNR2D332MSE
4700	51×100	6.3	0.15	2.90	LNR2D472MSE
6800	51×140	7.3	0.15	3.49	LNR2D682MSE
10000	63.5×120	9.8	0.20	4.24	LNR2D103MSE
15000	76.2×120	13.0	0.20	5.00	LNR2D153MSE
22000	90×140	15.9	0.25	5.00	LNR2D223MSE
33000	90×170	19.5	0.25	5.00	LNR2D333MSE
47000	90×220	20.9	0.25	5.00	LNR2D473MSE
68000	100×250	22.6	0.25	5.00	LNR2D683MSE

250V (2E)					
Cap. (μF)	Size φD × L(mm)	Rated ripple (Arms)	tan δ	Leakage Current (mA)	Code
1000	35×80	2.4	0.15	1.50	LNR2E102MSE
1500	35×100	3.0	0.15	1.83	LNR2E152MSE
2200	51×80	4.0	0.15	2.22	LNR2E222MSE
3300	51×100	5.4	0.15	2.72	LNR2E332MSE
4700	63.5×100	7.3	0.20	3.25	LNR2E472MSE
6800	63.5×120	8.9	0.20	3.91	LNR2E682MSE
10000	76.2×120	11.8	0.20	4.74	LNR2E103MSE
15000	90×140	16.4	0.25	5.00	LNR2E153MSE
22000	90×170	17.9	0.25	5.00	LNR2E223MSE
33000	90×220	19.7	0.25	5.00	LNR2E333MSE
47000	100×250	21.2	0.25	5.00	LNR2E473MSE

Rated ripple current (Arms) at 85°C, 120Hz

●Frequency coefficient of rated ripple current

Frequency (Hz)		60	120	360	1k	10k or more
Coeff.	10 to 100V	0.90	1.00	1.08	1.15	1.15
	160 to 250V	0.88	1.00	1.08	1.15	1.20